Cambridge Assessment International Education
Cambridge International General Certificate of Secondary Education (9–1)

CANDIDATE NAME	
CENTRE NUMBER	
CANDIDATE NUMBER	

PHYSICS **0972/41**

Paper 4 Theory (Extended) **October/November 2019**

1 hour 15 minutes

Candidates answer on the Question Paper.

No Additional Materials are required.

READ THESE INSTRUCTIONS FIRST

Write your centre number, candidate number and name on all the work you hand in.
Write in dark blue or black pen.
You may use an HB pencil for any diagrams or graphs.
Do not use staples, paper clips, glue or correction fluid.
DO **NOT** WRITE IN ANY BARCODES.

Answer **all** questions.
Electronic calculators may be used.
You may lose marks if you do not show your working or if you do not use appropriate units.
Take the weight of 1.0 kg to be 10 N (acceleration of free fall = 10 m/s^2).

At the end of the examination, fasten all your work securely together.
The number of marks is given in brackets [ ] at the end of each question or part question.

This document consists of **18** printed pages and **2** blank pages.

DC (KN) 192064
© UCLES 2019

Cambridge Assessment International Education

[Turn over

www.root19.com +91 - 9969 353 391

1 A car accelerates from rest at time $t = 0$ to its maximum speed.

Fig. 1.1 is the speed-time graph for the first 25 s of its motion.

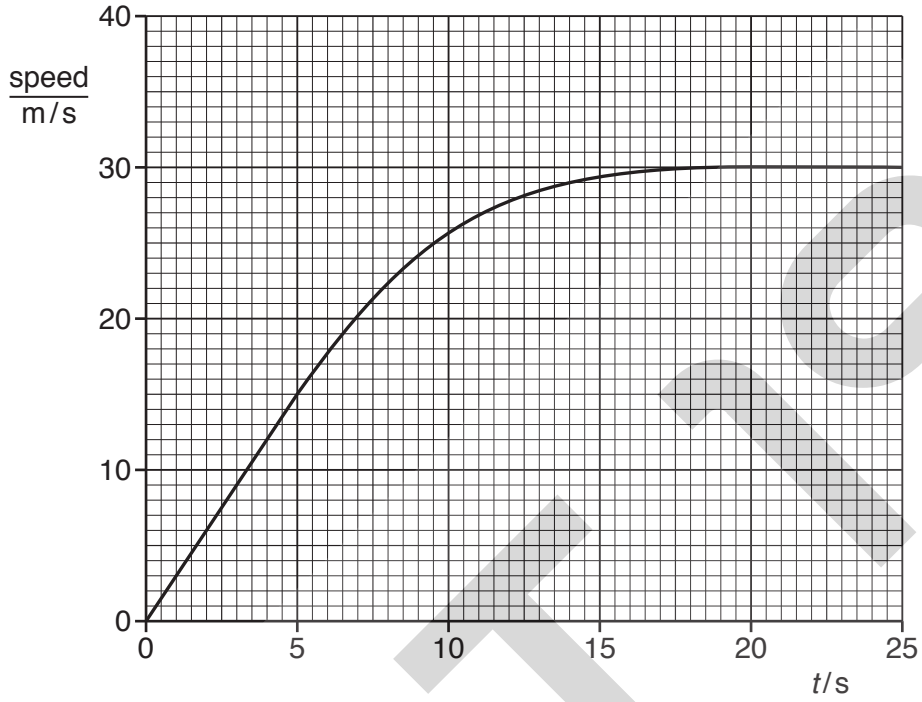

Fig. 1.1

(a) The mass of the car is 2300 kg.

For the time between $t = 0$ and $t = 5.0$ s, determine:

(i) the acceleration of the car

acceleration = ... [2]

(ii) the resultant force acting on the car.

resultant force = ... [2]

www.root19.com +91 - 9969 353 391

(b) Describe the motion of the car between $t = 10$ s and $t = 15$ s. Explain how Fig. 1.1 shows this.

.....

.....

.....

..... [3]

(c) Between $t = 10$ s and $t = 15$ s, the force exerted on the car due to the engine remains constant.

Suggest and explain why the car moves in the way shown by Fig. 1.1.

.....

.....

..... [2]

[Total: 9]

© UCLES 2019
www.root19.com

+91 - 9969 353 301

2 **(a)** State **two** properties of an object that may be changed by the action of forces.

1. .....

2. .....
[2]

(b) A chest expander is a piece of equipment used by athletes in a gym. Fig. 2.1 shows a chest expander that consists of five identical springs connected in parallel between two handles.

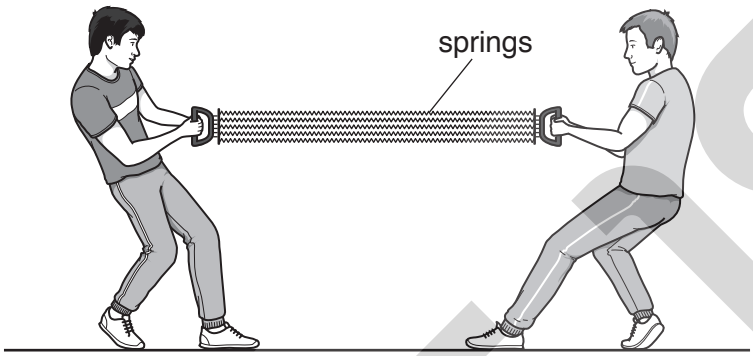

Fig. 2.1

Each spring has an unstretched length of 0.63 m.

Two athletes are stretching the chest expander by pulling on the two handles in opposite directions.

(i) The springs obey Hooke's law.

Explain what is meant by this statement.

.....

.....

..... [2]

(ii) Each athlete pulls the handle towards himself with a force of 1300 N.

1. State the tension in each spring.

tension = ... [1]

2. The chest expander stretches and each spring is now 0.94 m long.

Calculate the spring constant k of each spring.

k = ... [2]

www.root19.com +91 - 9969 353 391

(iii) State the energy changes taking place as the two athletes use their muscles to stretch the chest expander.

.....

.....

..... [2]

[Total: 9]

© UCLES 2019
www.root19.com

+91 - 9969 353 301

3 Fig. 3.1 shows a shooting competition, where air rifles fire soft metal pellets at distant targets.

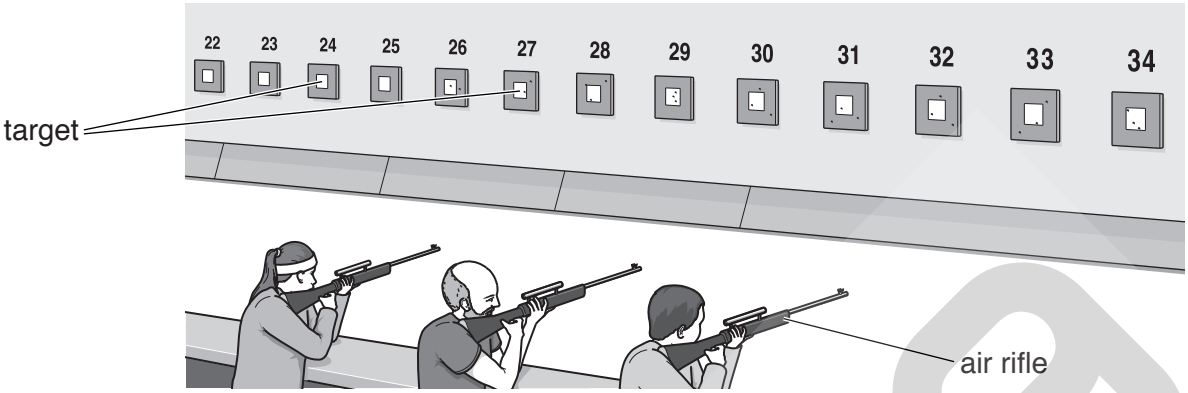

Fig. 3.1

When an air rifle is fired, it exerts an impulse of 0.019 N s on the pellet.

(a) Define *impulse*.

.....

..... [1]

(b) The pellet has a mass of 1.1×10^{-4} kg.

Determine:

(i) the speed with which the pellet leaves the rifle

speed = ... [2]

(ii) the kinetic energy of the pellet as it leaves the rifle.

kinetic energy = ... [3]

www.root19.com +91 - 9969 353 391

(c) The pellet melts when it strikes the target.

Describe how the molecular structure of the liquid metal differs from that of the solid metal.

.....

.....

.....

..... [3]

[Total: 9]

© UCLES 2019
www.root19.com

+91 - 9969 353 301

4 Fig. 4.1 shows a loudspeaker that is producing a sound wave in air of frequency 15 000 Hz.

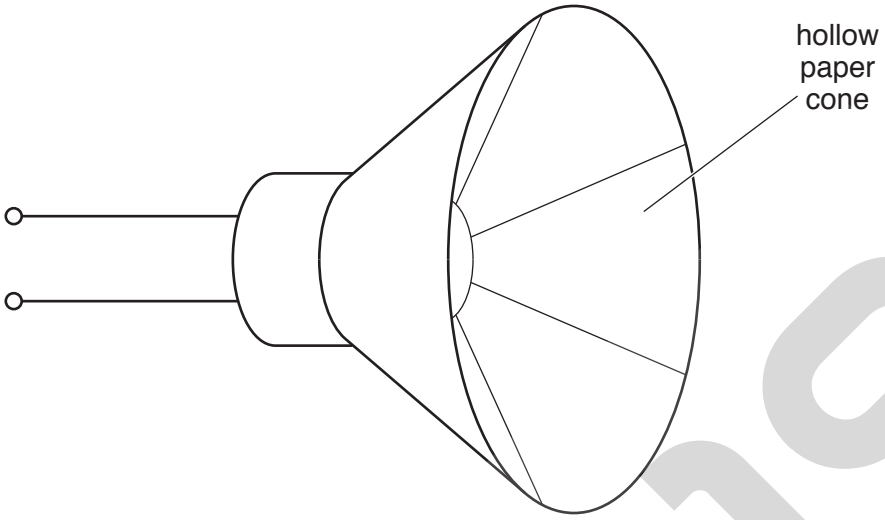

Fig. 4.1

(a) Describe how the cone of the loudspeaker produces this sound.

.....

.....

.....

..... [3]

(b) The speed of sound in air is 330 m / s.

Calculate the wavelength of this sound.

wavelength = ... [2]

www.root19.com +91 - 9969 353 391

(c) The loudspeaker is placed a considerable distance to the left of a barrier with a gap. The width of the gap is double the wavelength of the sound. Sound from the loudspeaker reaches the barrier and passes through the gap.

Fig. 4.2 shows the gap in the barrier.

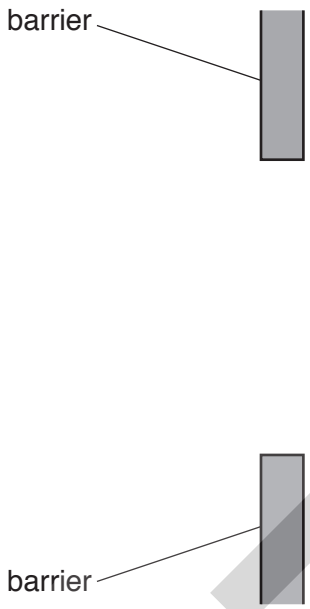

Fig. 4.2 (not to scale)

On Fig. 4.2, sketch a diagram that represents the sound wave as a series of wavefronts

- travelling towards the barrier
- in the gap
- and travelling away from the barrier.

[3]

[Total: 8]

© UCLES 2019
www.root19.com

+91 - 9969 353 301

5 Fig. 5.1 shows a sphere that is negatively charged. The sphere is attached to a plastic stand.

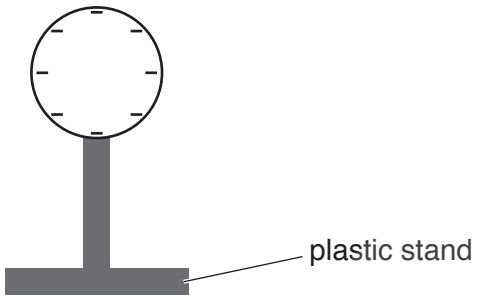

Fig. 5.1

(a) On Fig. 5.1, draw arrows to indicate the pattern and direction of the electric field in the region surrounding the sphere. [2]

(b) A smaller, uncharged metal sphere S is suspended by a plastic thread and brought close to the negatively charged sphere. Fig. 5.2 shows the two spheres.

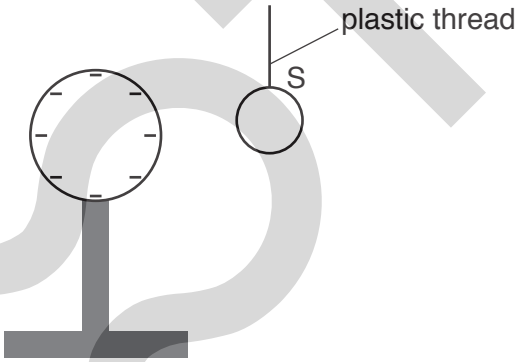

Fig. 5.2

(i) By drawing on Fig. 5.2, indicate the distribution of charge on S. [2]

(ii) State what happens to S.

.....

..... [1]

(iii) An earth wire is then touched against S.

Describe what happens in the wire and state how this affects the charge on S.

.....

.....

..... [2]

www.root19.com +91 - 9969 353 391

(c) The metal sphere S is an electrical conductor. The plastic thread is an electrical insulator.

Explain this difference by referring to the structures of the two materials.

.....

.....

..... [2]

[Total: 9]

ROOT 19

www.root19.com +91 - 9969 353 301

6 Fig. 6.1 shows a shower that takes in cold water. The water passes through an electric water heater and emerges from the showerhead at a higher temperature.

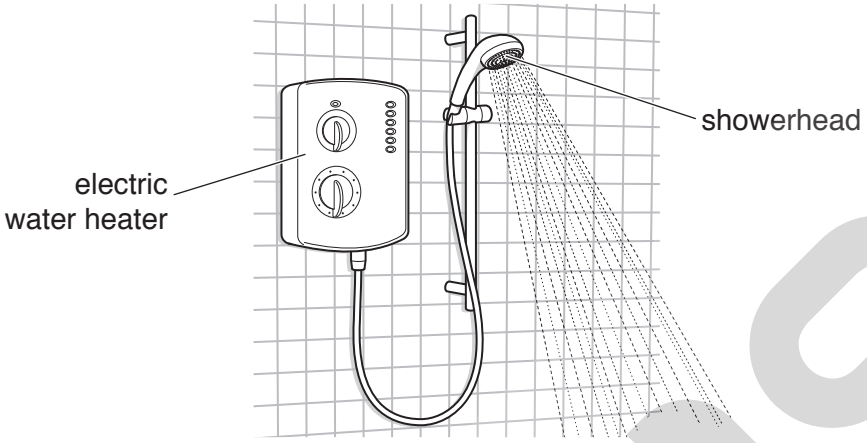

Fig. 6.1

The power of the heater is 9000 W.

(a) The shower is powered by a 230 V electricity supply.

(i) Calculate the current in the heater when it is switched on.

current = ... [2]

(ii) Suggest a suitable rating for the fuse in the heater circuit.

fuse rating = ... [1]

(b) The specific heat capacity of water is 4200 J/(kg °C). The initial temperature of the cold water is 16 °C.

Determine the maximum mass of water that can be heated to a temperature of 35 °C in 1.0 s.

mass = ... [4]

www.root19.com +91 - 9969 353 391

(c) A safety control in the shower switches off the shower when the water becomes dangerously hot. The control uses a thermocouple thermometer to measure the temperature of the heated water.

(i) Describe the structure of a thermocouple thermometer. Include a diagram in your answer.

.....

.....

..... [2]

(ii) Suggest **one** reason why a thermocouple thermometer is suitable for this purpose.

.....

..... [1]

[Total: 10]

© UCLES 2019
www.root19.com

+91 - 9969 353 301

7 The resistance of a 1.0 m length of resistance wire is 7.6 Ω. A length of this wire is taped to a metre rule. A crocodile clip is connected to one end of the resistance wire exactly at the 0 m mark of the rule. Fig. 7.1 shows the crocodile clip connected to terminal P.

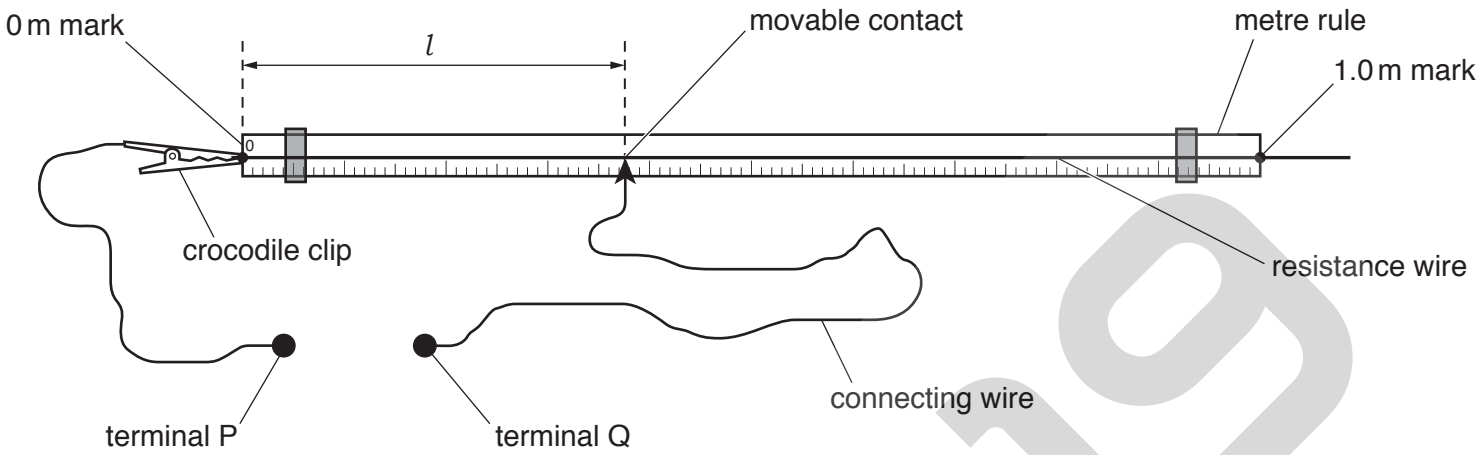

Fig. 7.1

A second terminal Q is connected to a movable contact using a long length of connecting wire. The movable contact is in contact with the resistance wire at a length l from the 0 m mark on the rule.

The movable contact is placed at different points on the resistance wire. The resistance R of the length l of the wire depends on l.

(a) On Fig. 7.2, sketch a graph to show how R varies with l for values of l between $l = 0$ and $l = 1.0$ m. Mark appropriate values on the axes of the graph.

Fig. 7.2

[2]

www.root19.com +91 - 9969 353 391

(b) Fig. 7.3 shows a battery of electromotive force (e.m.f.) 12 V connected across the 1.0 m length of the resistance wire.

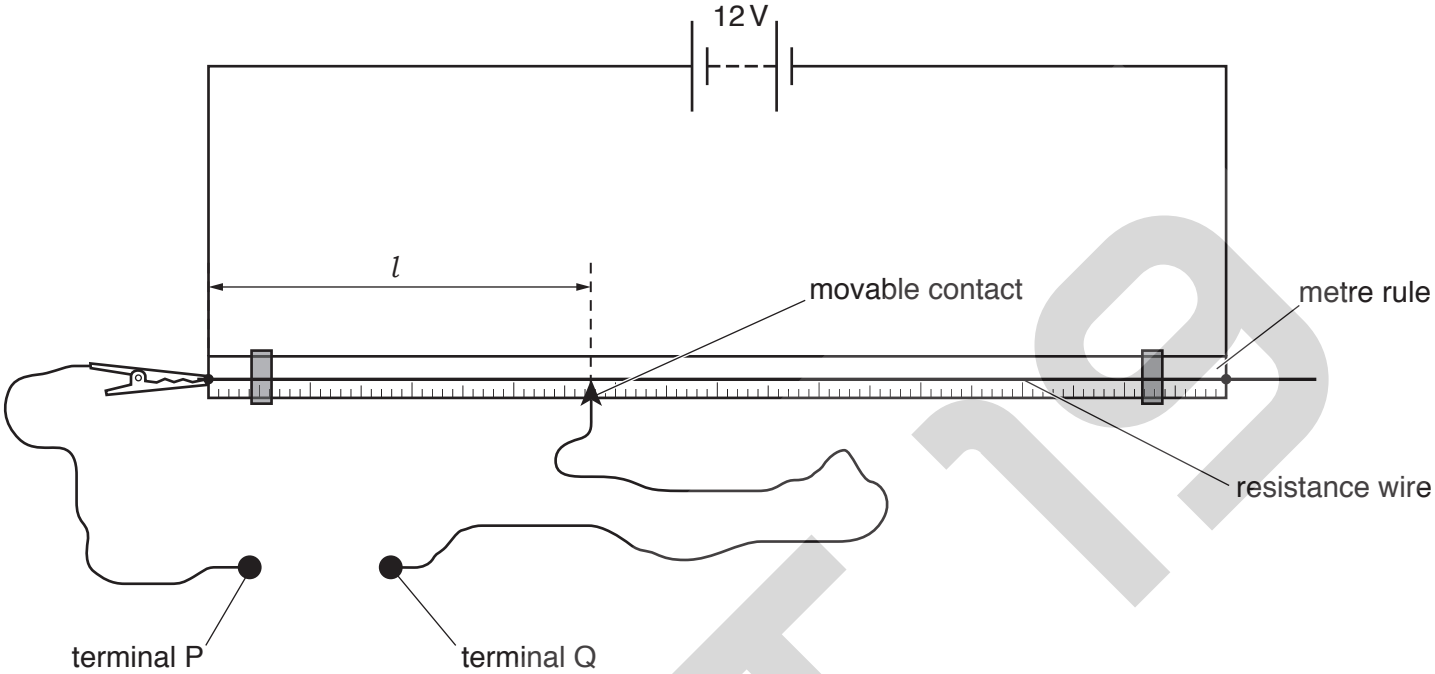

Fig. 7.3

(i) State what is meant by *electromotive force* (*e.m.f.*).

.....

.....

..... [2]

(ii) Calculate:

1. the current in the resistance wire

current = ... [2]

2. the potential difference (p.d.) between terminal P and terminal Q when $l = 0.35$ m

p.d. = ... [1]

3. the charge that passes through the resistance wire in 5.5 minutes.

charge = ... [2]

[Total: 9]

www.root19.com +91 - 9969 353 301

8 Fig. 8.1 shows a ray of red light incident on one side of a glass prism in air.

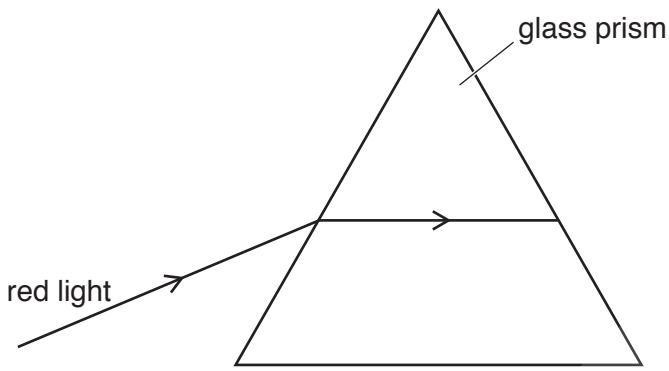

Fig. 8.1

For red light, the refractive index of glass is n_R.

(a) The angle of incidence is 53° and the angle of refraction in the glass is 30°.

(i) Calculate n_R.

n_R = ... [2]

(ii) On Fig. 8.1, sketch a line to indicate the path of the red light when it emerges from the glass prism. Label this path R. [1]

(iii) Explain why the quantity *refractive index* does not have a unit.

.....

..... [1]

(b) For violet light, the refractive index n_V of glass is slightly larger than n_R.

(i) A ray of violet light is incident on the prism along the same path as the ray of red light.

On Fig. 8.1, sketch a line to indicate the path of the violet light in the prism and when it emerges into the air. Label this path V. [1]

(ii) When a ray of white light is incident on the prism, dispersion produces a continuous spectrum of coloured light.

State how the speed of light in glass depends on its frequency. Explain how this is shown by the dispersion of white light in the prism.

statement .....

explanation .....

.....
[3]

[Total: 8]

www.root19.com +91 - 9969 353 391

BLANK PAGE

© UCLES 2019
www.root19.com

+91 - 9969 353 301

9 **(a)** The chemical symbol of the element lithium is Li. The proton number of lithium is 3.

Fig. 9.1 is a representation of a nucleus of a radioactive isotope of lithium that is about to decay.

Fig. 9.1

(i) Write down, using nuclide notation, the symbol that represents this isotope of lithium.

..... [1]

(ii) This isotope of lithium decays by β-particle emission to form another nucleus.

Complete Fig. 9.2 to represent this decay by:

- using the same representation as in Fig. 9.1 and in the space after the arrow, draw a diagram of the nucleus formed by the decay
- writing the name of the particle that is identical to a β-particle on the answer line provided.

+ .....

Fig. 9.2

[3]

(b) A radiation detector is set up in a laboratory where there are no radioactive samples.

On **six** separate occasions, the detector is switched on for 1.0 minute and the background count is recorded. The counts are:

23 27 25 24 20 25

(i) State why the readings are **not** all identical.

..... [1]

(ii) Suggest a possible source for this background radiation.

..... [1]

© UCLES 2019
www.root19.com

+91 - 9969 353 391

(iii) A sample containing only one radioactive isotope is brought into the laboratory. The half-life of the isotope is 15 hours.

The sample is placed near to the radiation detector in this laboratory. The detector is switched on and, after 1.0 minute, a count of 440 is recorded.

The sample is left next to the detector and the experiment is repeated 45 hours later.

The detector is switched on for 1.0 minute.

Predict the reading for the count obtained on this occasion.

reading ..... [3]

[Total: 9]

© UCLES 2019
www.root19.com

+91 - 9969 353 391

BLANK PAGE

Permission to reproduce items where third-party owned material protected by copyright is included has been sought and cleared where possible. Every reasonable effort has been made by the publisher (UCLES) to trace copyright holders, but if any items requiring clearance have unwittingly been included, the publisher will be pleased to make amends at the earliest possible opportunity.

To avoid the issue of disclosure of answer-related information to candidates, all copyright acknowledgements are reproduced online in the Cambridge Assessment International Education Copyright Acknowledgements Booklet. This is produced for each series of examinations and is freely available to download at www.cambridgeinternational.org after the live examination series.

Cambridge Assessment International Education is part of the Cambridge Assessment Group. Cambridge Assessment is the brand name of the University of Cambridge Local Examinations Syndicate (UCLES), which itself is a department of the University of Cambridge.

www.root19.com +91 - 9969 353 391